D-STAR DV mode Adapter (using UT-118)

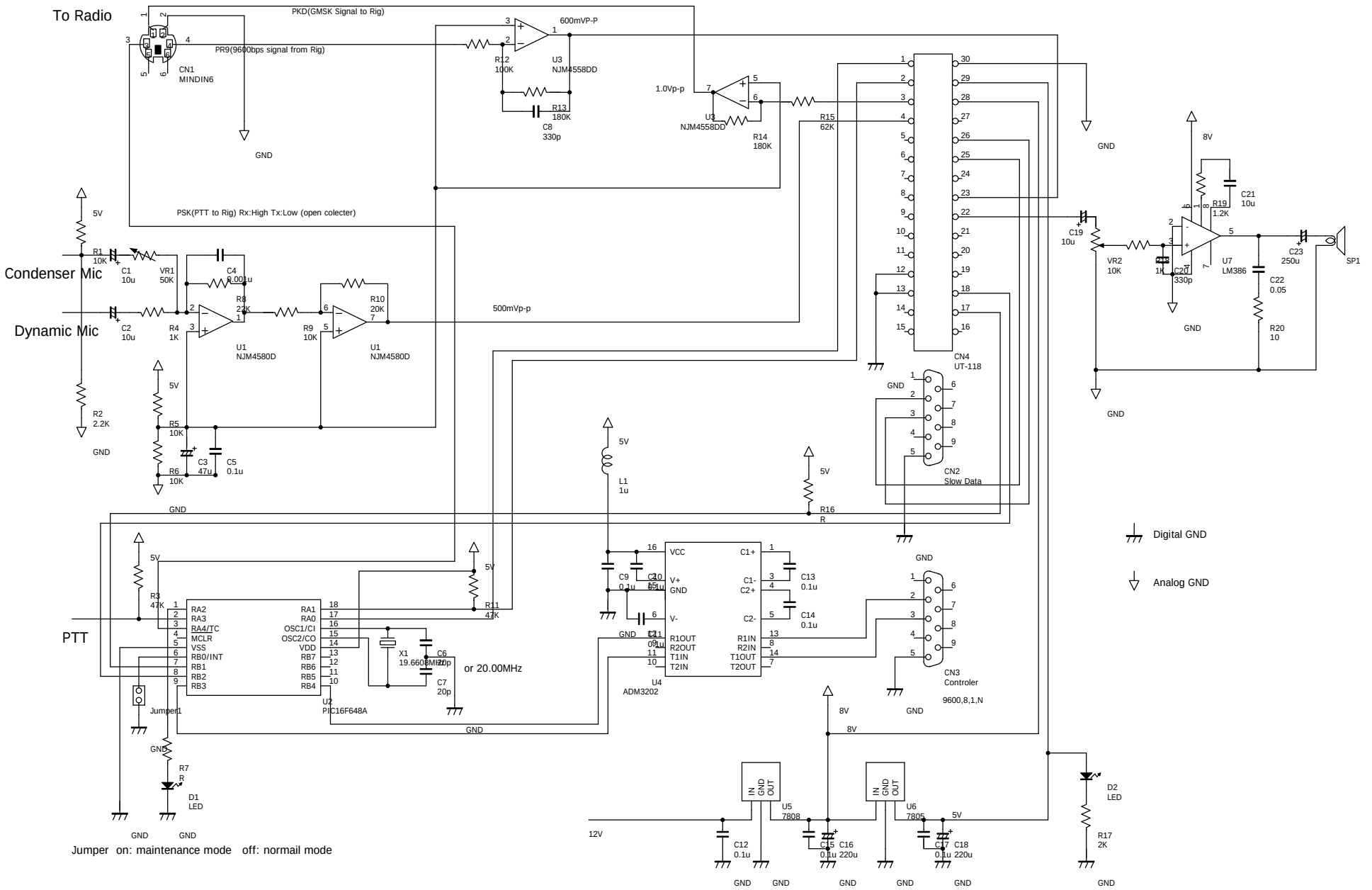

(C) 23 July 2007 V0.15 Satoshi Yasuda 7m3tjz/ad6gz